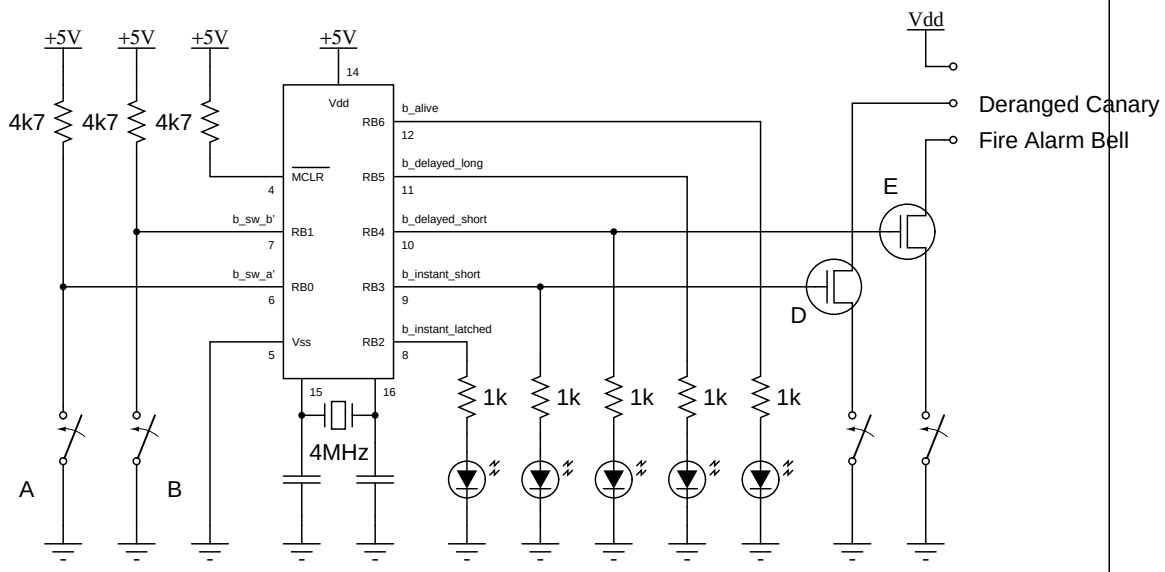

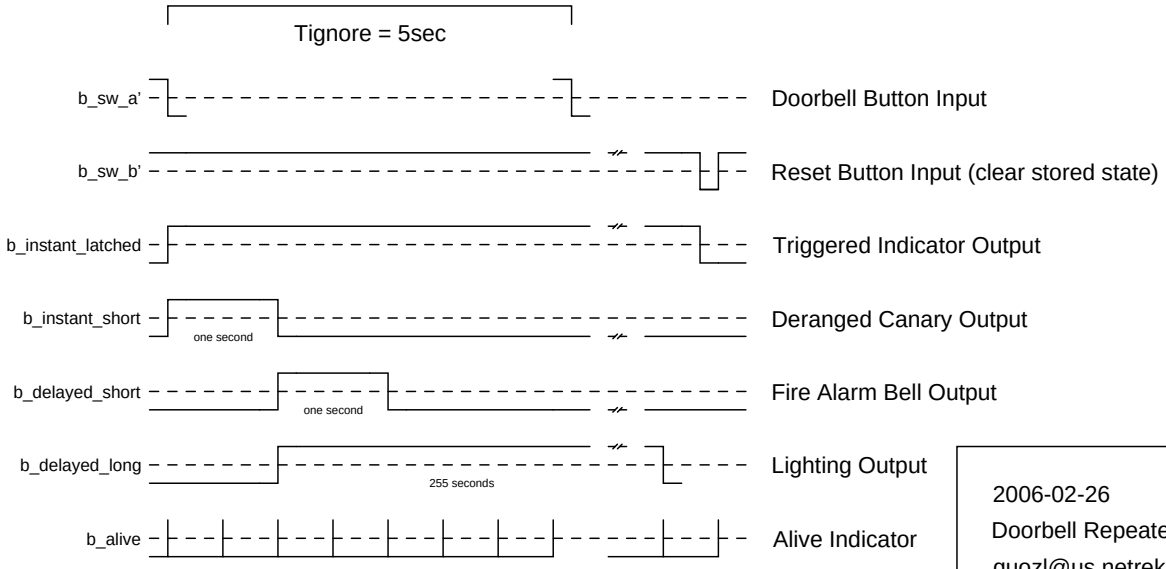

2006-02-26
Doorbell Repeater
quozl@us.netrek.org