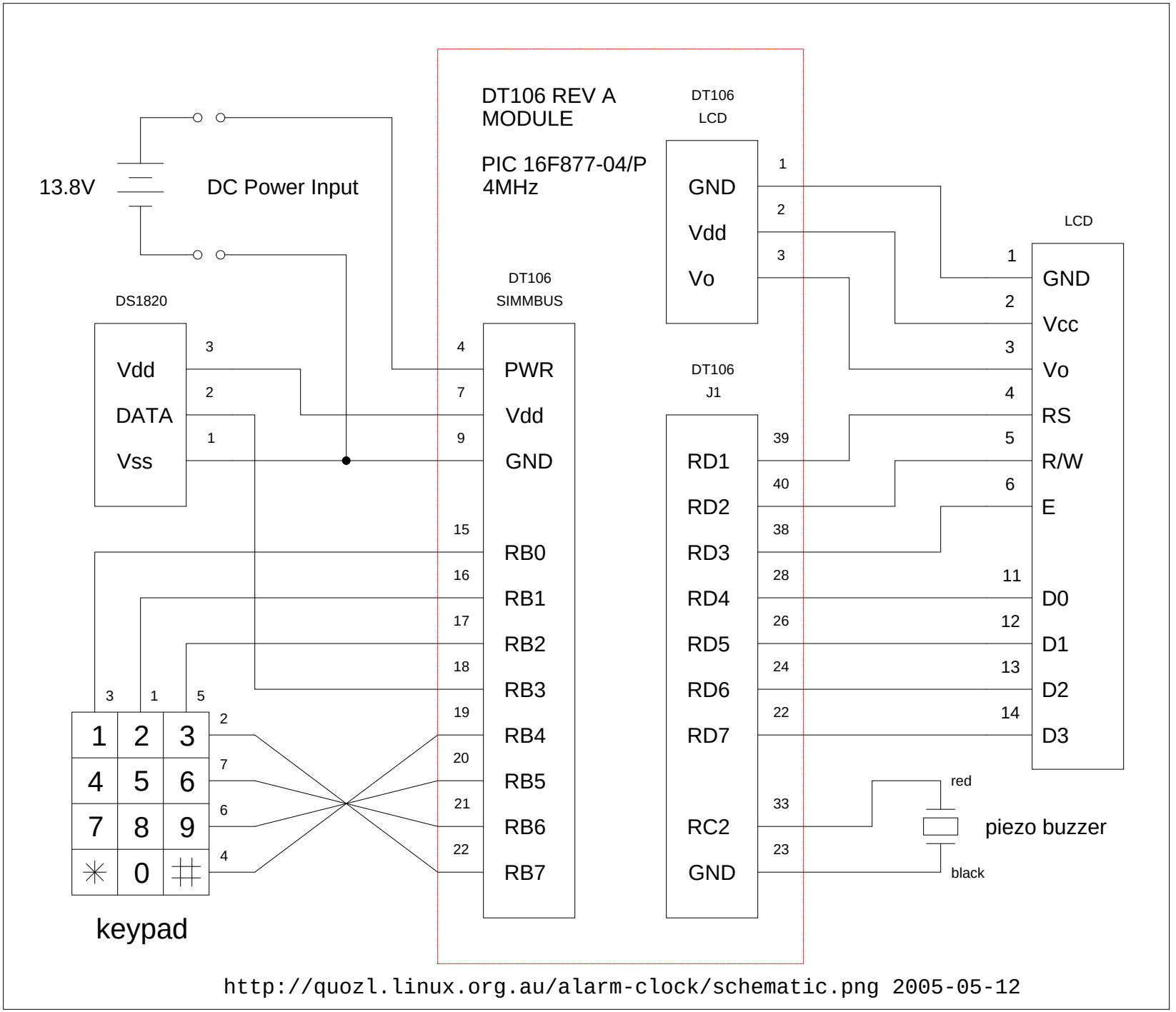

pins = 0.5

signals = 0.75