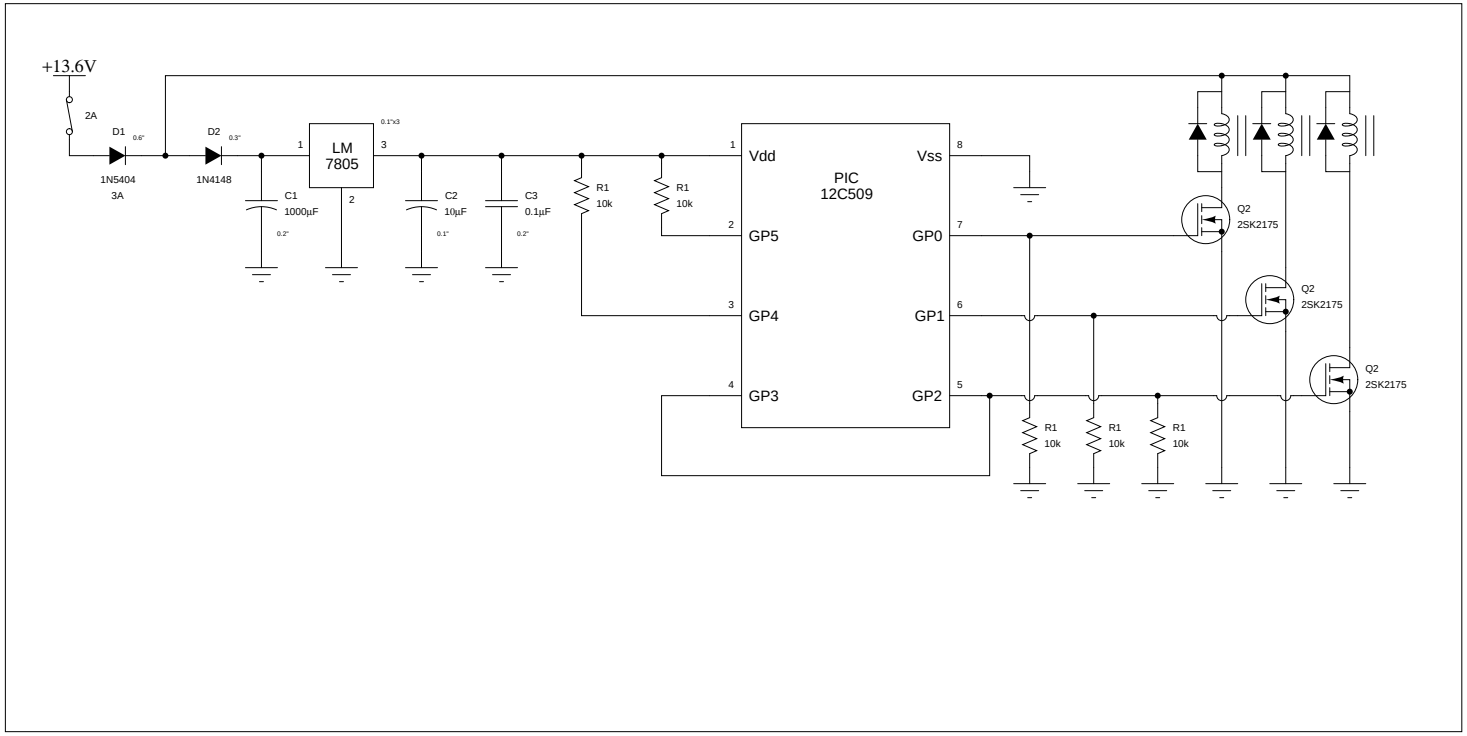
+13.6V
2A
D1
0.6"
1N5404
3A
D2
0.3"
1N4148
C1
1000µF
0.2"
LM
7805
1
2
3
0.1"x3
C2
10µF
0.1"
C3
0.1µF
0.2"
R1
10k
R1
10k
PIC
12C509
Vdd
GP5
GP4
GP3
Vss
GP0
GP1
GP2
1
2
3
4
8
7
6
5
R1
10k
R1
10k
R1
10k
Q2
2SK2175
Q2
2SK2175
Q2
2SK2175